Software **INDEX**

S.No.	DATE	EXPERIMENT	PAGE No.	REMARKS
1.	14/2/25	Determination of voltage gain of an amplifier using its frequency response	16-18	5
2.	14/2/25	Analysis of stabilization of gain of transistorized voltage series feedback amplifier	19-21	5
3.	28/2/25	Analysis of stabilization of gain of current shunt feedback amplifier	22-23	5
4.	21/3/25	Design and realisation of RC phase shift / wein Bridge oscillator to generate sinusoidal signal.	24-25	4
5.	28/3/25	Tuned voltage amplifier	26-28	5
6.	28/3/25	Series FED class A power amplifier	29-31	5
7.	28/3/25	COmplementary-symmetry class-B power amplifier	32-33	5

Determination of voltage gain of an amplifier using its frequency response	Exp. No: 1
	Date: 14/2/25

Aim: To measure the voltage gain and bandwidth from the frequency response of an amplifier.

Apparatus:

S.No.	Name	Range	Qty
1.	Transistor	BC107	1
2.	Capacitor	10uF, 100uF	2, 1
3.	Resistors	1kΩ, 33kΩ, 3.3kΩ	3, 1, 1
4.	Functiongenerator	(0-3)MHz	1
5.	CRO	30MHz	1
6.	Breadboard	–	1
7.	Regulated Power Supply	(0-30V)	1
8.	Connecting wires	–	Read.

Theory:

In the CE amplifier its current gain and voltage gain are high resulting in higher power gains compared with the other configurations. Its input impedance is medium high and output impedance is medium. In the circuit emitter resistance provides bias stabilization due to DC generative feedback. But this also reduces AC gain since same feedback is there for AC also. AC degenerative feedback is eliminated by bypassing RC using a large capacitor. This bypass capacitor affects the frequency response of the amplifier. Frequency response is the curve drawn on a semi log paper between gain (usually in dB) of the amplifier and the input signal frequency. Generally frequency is taken

Circuit diagram:

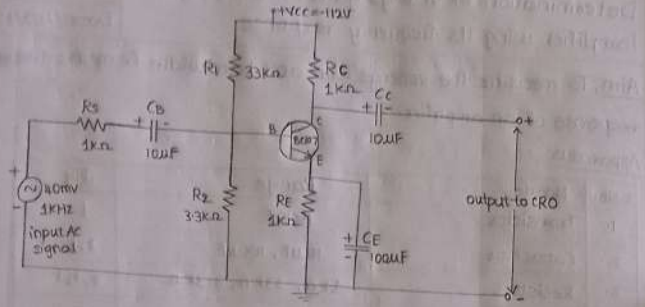

CE amplifier

Expected waveform:

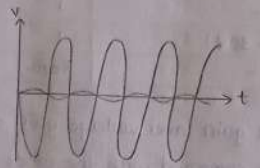

Model Graph:

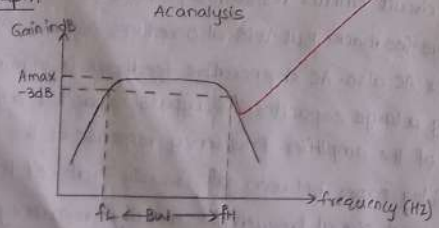

$BW = f_H - f_L$

along X-axis on a log scale and gain (dB) along Y-axis on a linear scale. The amplifier mairtains constant gain in the mid band of frequencies. The gain below the lower cut off frequency is rolling down. This is because during the low frequency the resistance of the input capacitor C_B very high. So amplification is poor. During high frequencies, input capacitor acts as short circuit. But the reactance of emitter bypass capacitor C_E is low.

Procedure:

1. The circuit is connected as per the circuit diagram.
2. A sinusoidal input of 40mV peak-to peak is applied at 1KHz frequency from function generator and o/p waveform is observed on the CRO.
3. The output voltage Vo is directly read from the screen of CRO.
4. The frequency of input signal is changed in steps of 50Hz to 3MHz. And the individual output voltages are noted down from the CRO.
5. A graph is plotted between $20\log V_o/V_i$ and frequency.
6. Measure the bandwidth from the graph.

Calculations:

i) Determine lower cut-off frequency and upper cut-off frequency from the graph.

ii) Calculate bandwidth.

Precautions:

1. Keep all coarse controls of RPS minimum and current controls in maximum position before switch ON.

Observations:

Input voltage Vin = 40mv

S. No.	Frequency (Hz)	Gain(Av) = Vout/Vin	Gain in dB = 20logAv
1	50	11.013	20.838
2	100	12.27	21.77
3	200	12.66	22.04
4	300	12.74	22.103
5	500	12.77	22.12
6	1K	12.79	22.13
7	2K	12.79	22.13
8	3K	12.79	22.13
9	5K	12.79	22.13
10	10K	12.79	22.13
11	20K	12.79	22.13
12	30K	12.79	22.13
13	50K	12.79	22.13
14	1M	12.35	21.83
15	2M	10.58	20.48

$BW = f_H - f_L$

$= 200KHz - 40Hz$

$= 199KHz$

f_H = upper cutoff frequency

f_L = lower cutoff frequency

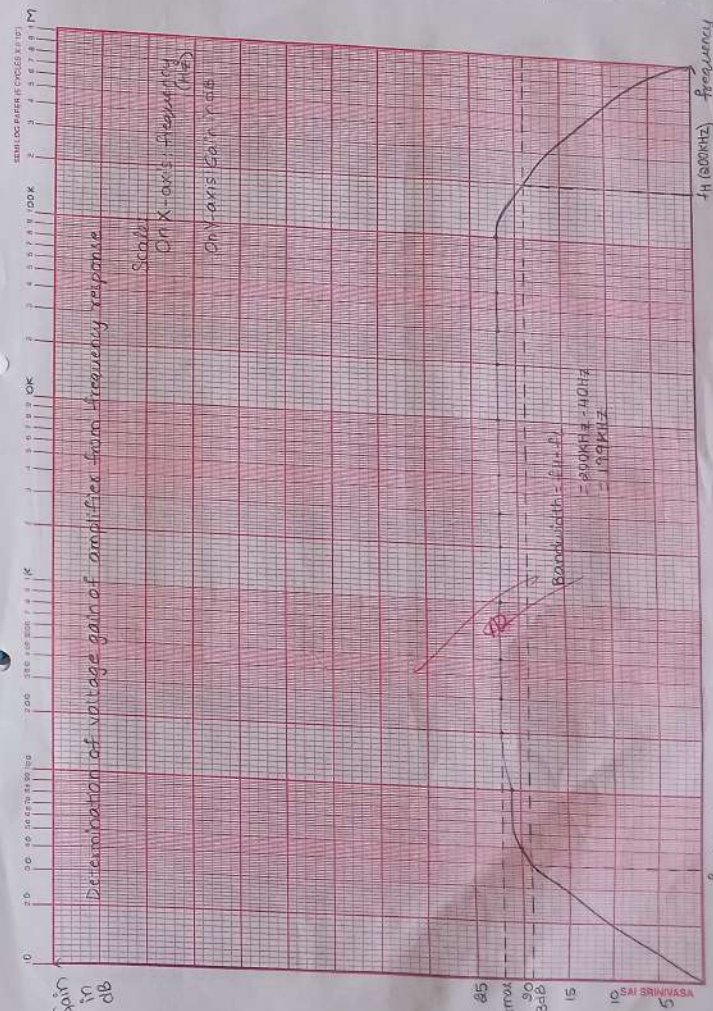

2. Carefully connect the transistor terminals.

Graph:

Plot the graph, frequency versus gain in dB on a semilog sheet.

Result:

Thus the experiment on amplifier is done. And the voltage gain and bandwidth has been found.

(i) Gain = 12.79

(ii) Lower cut-off frequency = 40Hz

(iii) Upper cut-off frequency = 200KHz

(iv) Bandwidth = 199KHz

Circuit diagram:

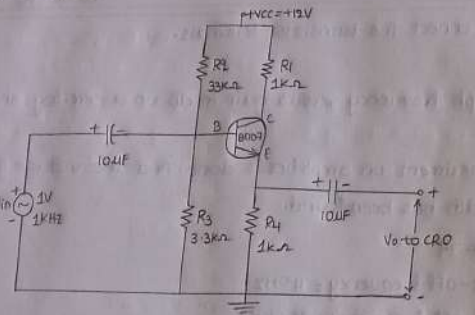

voltage series feedback amplifier

Expected waveform:

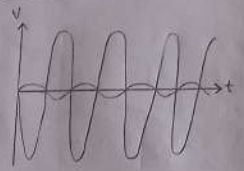

Model Graph: AC analysis

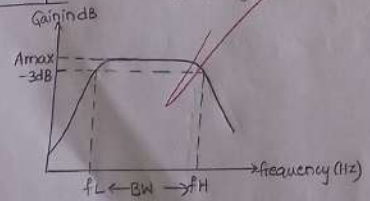

$BW = f_H - f_L$

f_H = upper cutoff frequency

f_L = lower cutoff frequency

Analysis of stabilization of gain of transistorized voltage series feedback amplifier	Exp. No: 2
	Date: 14/2/25

Aim: To plot the frequency response characteristics of voltage series feedback amplifier and find gain and bandwidth.

Apparatus Required:

S.NO.	Name	Range	Qty.
1.	Transistor	BC107	1
2.	Resistors	1kΩ, 33kΩ, 3.3kΩ	2, 1, 1
3.	Capacitor	10μF	2
4.	Function Generator	(0-3) MHz	1
5.	CRO	30MHz	1
6.	Regulated Power Supply	(0-30) V	1
7.	Breadboard	-	1
8.	Connecting wires	-	Read.

Theory:

The process of injecting a fraction of output energy of some device back to the input of same device is known as feedback. Depending on the relative polarity of the signal being feedback into a circuit, there are two basic types of feedback amplifiers namely,

(a) Positive feedback ; (b) Negative feedback.

Positive feedback:

When the feedback signal (voltage or current) is in phase with the input signal and thus aids it, it is called positive feedback. Positive feedback increases the gain of amplifier. However it has the disadvantage of increased distortion and instability. Therefore, positive feedback

Observations:

Input voltage Vin = 1V

S. No.	Frequency (Hz)	Gain (Av) = Vout/Vin	Gain in dB = 20log Av
1	50	0.93	-0.63
2	100	0.94	-0.53
3	200	0.94	-0.53
4	300	0.94	-0.53
5	500	0.94	-0.53
6	1K	0.94	-0.53
7	2K	0.94	-0.53
8	3K	0.94	-0.53
9	5K	0.94	-0.53
10	10K	0.94	-0.53
11	20K	0.94	-0.53
12	30K	0.94	-0.53
13	50K	0.94	-0.53
14	1M	0.94	-0.53
15	2M	0.94	-0.53

is seldom used for amplification. One important use of positive feedback is in oscillators.

Negative feedback:

When the feedback signal (voltage or current) is out of phase with the input signal and thus opposes it, it is called negative feedback. Negative feedback reduces the gain of amplifier. However it has a number of advantages, among them being

a. Higher input impedance
b. Lower output impedance
c. Better stabilized voltage gain
d. Improved frequency response
e. Reduced noise
f. Increased bandwidth
g. More linear operation

Due to these advantages, negative feedback is frequently employed in amplifiers.

When any increase in the output signal results into the input in such a way as to cause the decrease in the output signal, the amplifier is said to have negative feedback. The advantages of providing negative feedback are that transfer gain of the amplifier with feedback can be stabilized against variations in the hybrid parameters of the transistor or the parameters of the other active devices in the circuit. The disadvantage of gainegative feedback is that the voltage gain is decreased. In voltage-series feedback, the input impedance of the amplifier is decreased and the output impedance is increased. Noise and distortions are reduced considerably.

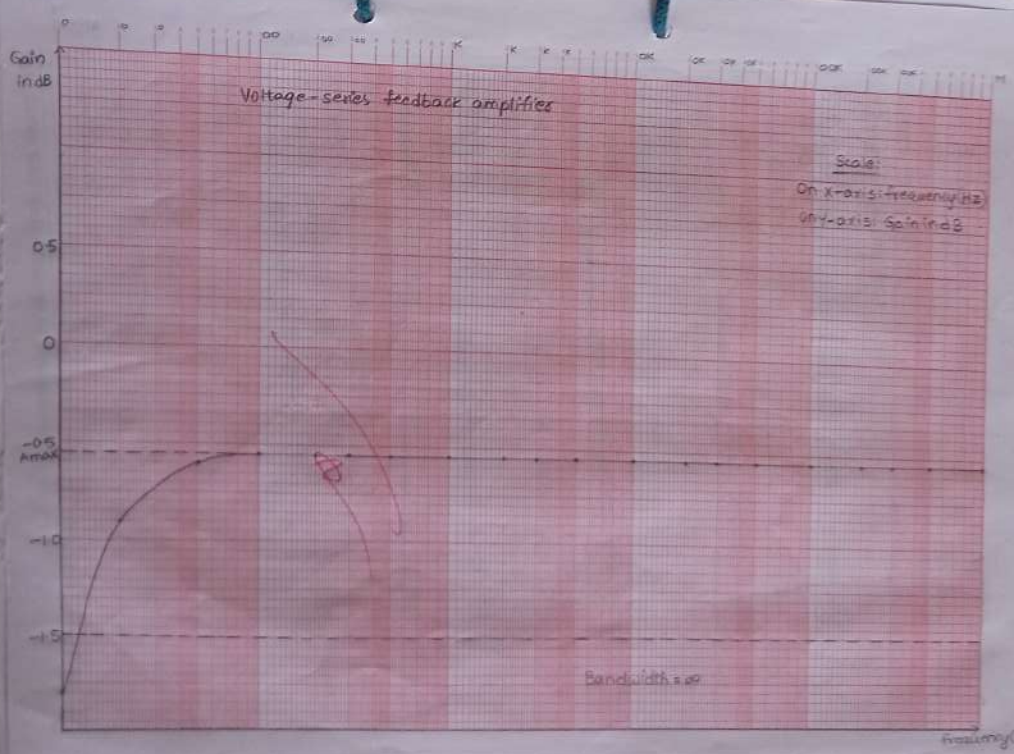
Gain in dB
Voltage-series feedback amplifier
Scale:
On X-axis: frequency (Hz)
On Y-axis: Gain in dB
0.5
0
-0.5
Amax
-1.0
-1.5
Bandwidth = ∞
frequency (Hz)

Procedure:

1. Connect the circuit on breadboard as shown in circuit diagram.
2. By keeping the amplitude of input signal constant, vary the frequency from 0 to 1MHz.
3. Note down the amplitude of output signal for corresponding values of input frequencies.
4. Calculate the voltage gain in decibels.
5. Plot in semi-log graph between gain versus frequency and calculate the bandwidth.

Precautions:

1. Test transistors before assembling the circuits.
2. Resistors should be connected properly without interchanging the values.
3. Check the continuity of the connecting wires.

Applications:

The applications where we need stable output waveforms.

Calculations:

(i) Determine lower cutoff frequency and upper cut-off frequency from the graph with and without feedback.
(ii) Calculate bandwidth with and without feedback.
(iii) Calculate gain bandwidth product with and without feedback.

Result:

i) Gain = 0.94
ii) Lower cut off frequency = -
iii) Upper cut off frequency = -
iv) Bandwidth = ∞

Circuit diagram:

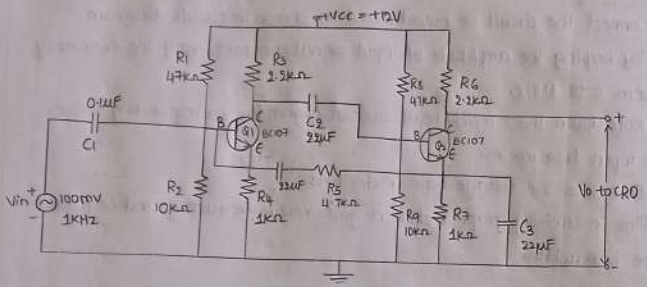

Current-shunt feedback amplifier

Expected waveform:

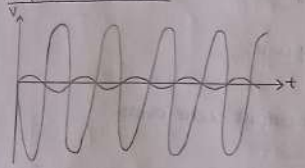

Model Graph:

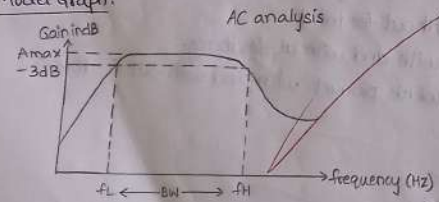

$BW = f_H - f_L$

f_H = upper cutoff frequency

f_L = lower cutoff frequency

Analysis of stabilization of gain of transistorized current shunt feedback amplifier	Exp. No: 3
	Date: 28/2/25

Aim: To plot the frequency response characteristics of current shunt feedback amplifier and find gain and bandwidth.

Apparatus Required:

S.No.	Name	Range	Qty.
1.	Transistor	BC107	2
2.	Resistor	47K, 10K, 1K, 2.2K, 4.7kΩ	2,2,2,2,1
3.	Capacitor	22μF, 0.1μF	3,1
4.	Function Generator	(0-3)MHz	1
5.	CRO	30MHz	1
6.	Regulated Power Supply	(0-30) V	1
7.	Breadboard	–	1
8.	Connecting wires	–	Read.

Theory:

Current shunt feedback circuit shows two transistors in cascade with feedback from the second emitter to the first base through the resistor RF. We verify that this connection produces negative feedback. The voltage V_{i2} is much larger than V_i because of the voltage gain of Q_1. Also V_{i2} is 180° out of phase with V_{i1}. Because of emitter follower action V_{e2} is only slightly smaller than V_{i2} and these voltages are in phase. Hence V_{e2} is larger in magnitude than V_{i1} and is 180° out of phase with V_{i1}. If the input signal increases so that I_s increases I_f also increases and $I_i = I_s - I_f$ is smaller than would be their were no feedback. This action is characteristics of negative feedback.

Observations:

Input voltage Vin = 100mV

S. No.	Frequency (Hz)	Av = Vout/Vin	Gain in dB = 20log Av
	10	0.064	−23.87
	50	1.165	1.326
	100	45.8	33.2
	600	110.52	40.86
	700	127.50	42.10
	1K	137.43	42.76
	2K	146.79	43.33
	5K	147.3	43.36
	10K	147.47	43.37
	20K	147.4	43.37
	50K	146.7	43.32
	100K	144.4	43.191
	200K	130.6	42.38
	500K	123.06	41.80
	1M	63.66	36.07

BW = 600KHz − 400Hz

= 599.600KHz

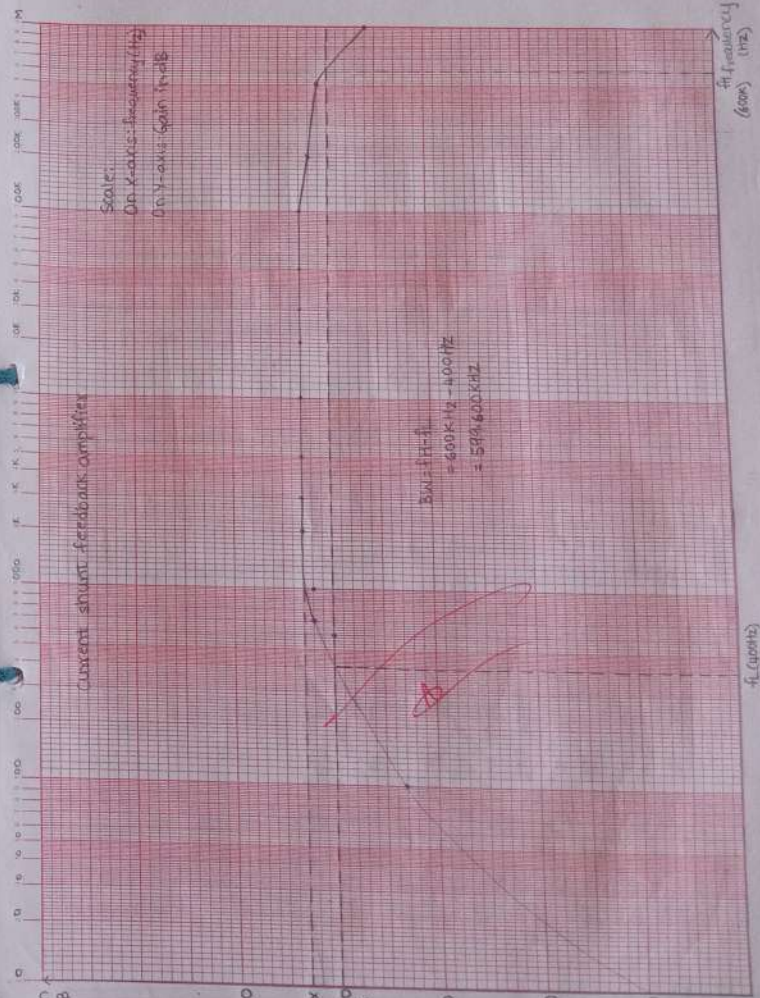

Procedure:

1. Connect the circuit on breadboard as shown in the circuit diagram.
2. By keeping the amplitude of input signal constant, vary the frequency from 0 to 3MHz.
3. Note down the amplitude of the output signal for corresponding values of input frequencies.
4. Calculate the voltage gain in decibels.
5. Plot in semilog graph between gain in dB versus frequency.
6. Calculate the bandwidth.

Calculations:

i) Determine lower & upper cut-off frequencies from graph with feedback.
ii) Calculate bandwidth.

Precautions:

1. Test transistors before assembling the circuits.
2. Resistors should be connected properly without interchanging.
3. Check the continuity of the connecting wires.

Applications:

The applications where we need stable output waveform.

Result:

i) Gain = 147.4
ii) Lower cut off frequency = 400Hz
iii) Upper cut off frequency = 600KHZ
iv) Bandwidth = 599.600KHZ

Circuit diagram:

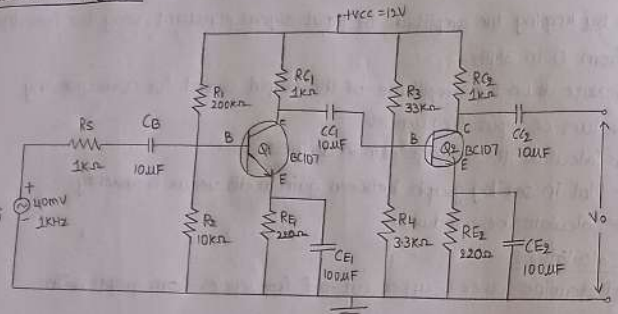

RC coupled amplifier

Model Graph:

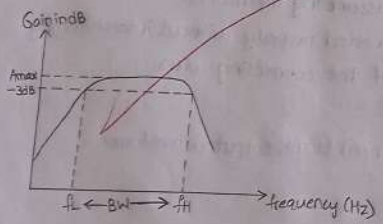

BW = fH - fL

BW = Bandwidth

fH = upper cut off frequency

fL = Lower cut off frequency

Determination of gain and bandwidth of two stage RC coupled amplifier from the frequency response (Using simulation)	Exp. No: 4
	Date: 21/3/25

Aim: To plot the frequency response characteristics of two stages RC coupled amplifier and calculate the gain and bandwidth.

Apparatus Required:

S.No.	Name	Range	Qty.
1.	Transistors	BC107	2
2.	Resistors	330, 4K, 1K, 200K, 10K, 35K, 15KΩ	2, 2, 1, 1, 1, 1, 1, 1
3.	Capacitors	10μF, 47μF	1
4.	Function Generator	(0-3) MHz	1
5.	CRO	30MHz	1
6.	Regulated Power Supply	(0-30)V	1
7.	Breadboard		1
8.	Connecting wires		Reqd.

Theory:

To improve gain characteristics of an amplifier, two stages of CE amplifier can be cascaded. While cascading the output of one stage is connected to input of another stage. If R and C elements are used for coupling, that circuit is named as RC coupled amplifier. Each stage of the cascade amplifier should be biased at its designed level. It is possible to design a multistage cascade in which each stage is separately biased and coupled to the adjacent stage using blocking or coupling capacitors. In this circuit each of the two capacitors C1 & C2

Observations:

Input voltage Vin = 40mV

S.No.	Frequency (Hz)	$A_V = \frac{V_{out}}{V_{in}}$ (Gain)	Gain in dB = 20 log AV
1	10	7.29	17.25
2	50	33.95	30.67
3	100	54.19	34.67
4	200	69.16	36.79
5	500	76.25	37.64
6	1K	77.43	37.77
7	2K	77.74	37.81
8	5K	77.82	37.82
9	10K	77.83	37.82
10	20K	77.83	37.82
11	50K	77.79	37.81
12	100K	77.63	37.80
13	200K	77.03	37.73
14	500K	73.11	37.27
15	1M	62.77	35.95

Bandwidth = $f_H - f_L$

= 300KHz - 100Hz

= 299KHz

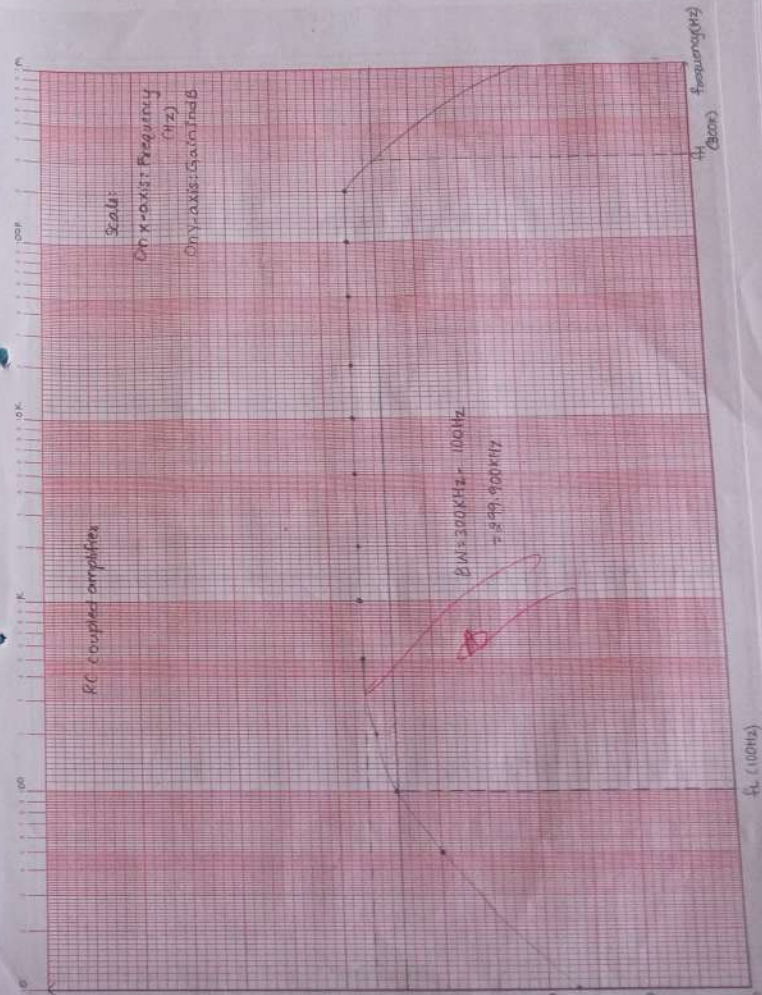

isolate the separate bias network by acting as open circuits to dc and allow only signals of sufficient high frequency to pass through cascade.

Procedure:

1. Connect the circuit on breadboard as shown in the circuit diagram.
2. By keeping the amplitude of input signal constant, vary the frequency from zero to 1MHz.
3. Note down the amplitude of output signal for corresponding values of input frequencies.
4. Calculate the voltage gain in decibels.
5. Plot in semi log graph between gain Vs frequency and calculate bandwidth.

Precautions:

1. Test the transistors before assembling the circuits.
2. Resistors should be connected properly without interchanging values
3. Check the continuity of the connecting wires.

Applications:

To get the desired gain.

Calculations:

1. Determine lower & upper cut-off frequencies from the graph.
2. Calculate bandwidth.

Result:

(i) Lower cut off frequency = 100Hz
(ii) Upper cut off frequency = 300KHz
(iii) Band width = 299KHz

Circuit diagram:

Tuned Voltage Amplifier

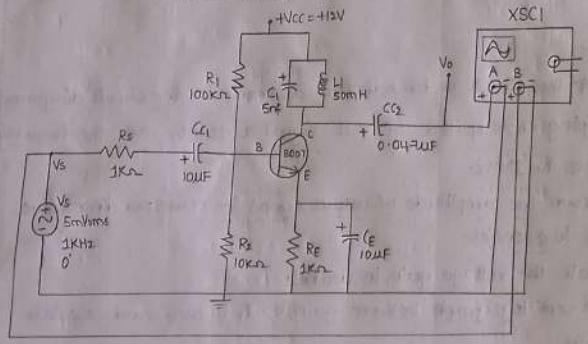

Observations/Graphs: Input and output waveforms

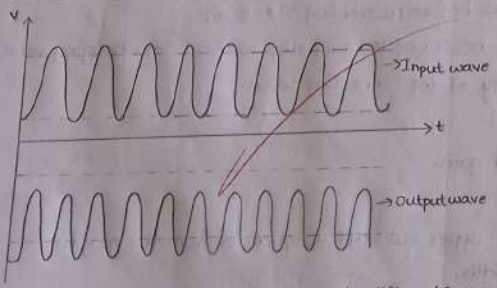

Frequency response: Tuned Voltage Amplifier - AC analysis

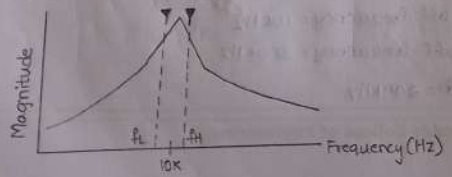

Tuned Voltage Amplifier (Using simulation)	Exp. No: 5
	Date: 28/3/25

Aim: To obtain the frequency response of a tuned voltage amplifier using Multisim and to obtain the bandwidth.

Software tool: Multisim 14.1V

Apparatus:

S.No.	Name	Range	Quantity
1.	Transistor	SL100/BC107	1
2.	Resistors	1KΩ, 10KΩ, 100KΩ	2,1,1
3.	Capacitors	10μF, 5nF, 0.047μF	2,1,1
4.	Inductor	50mH	1
5.	RPS	12V	1
6.	CRO	30MHz	1

Theory:

Most of the audio amplifiers we have discussed in the earlier chapters will also work at radio frequencies i.e above 50KHz. However they suffer from two major drawbacks. First they become less efficient at radio frequency. Secondly such amplifiers have mostly resistive loads and consequently their gain is ildependent of signal frequency over a large bandwidth. Radio and television transmission are carried on a specific radio frequency assigned to the broadcasting station. The radio receiver is required to pick up and amplify the radio frequency desired while discriminating all others. To achieve this, the simple resistive load is replaced by a parallel tuned circuit whose

Observations:

Input Voltage Vin = 5mV

S. No.	Frequency (Hz)	Gain $A_V = \frac{V_{out}}{V_{in}}$	Gain in dB $= 20\log A_V$
1.	10	0.003094	-50.189
2.	20	0.008448	-41.464
3.	30	0.01854	-34.637
4.	50	0.043279	-27.274
5.	100	0.15932	-15.954
6.	200	0.545114	-5.35
7.	300	1.116266	0.9533
8.	500	2.069662	6.3179
9.	1K	4.597066	13.2496
10.	2K	9.728702	19.75
11.	3K	16.53929	24.36
12.	5K	31.5233	29.97
13.	10K	2603.546	68.311
14.	20K	31.99635	30.10
15.	30K	16.78816	24.500
16.	50K	9.911346	19.9226
17.	70K	7.753126	17.7895
18.	100K	4.816181	13.64
19.	200K	2.394479	7.56
20.	300K	1.507449	3.5631
21.	500K	0.948224	-0.4617
22.	1M	0.469876	-6.5603

impedance strongly depends upon frequency. Such a tuned circuit becomes very selective and amplifies very strongly signals of resonant frequency and narrow band on either side. Therefore, the used of tuned circuits in conjunction with a transistor makes possible the selection and efficient amplification of a particular desired radio frequency. Such an amplifier is called a tuned amplifier. Amplifiers which amplify a specific frequency are called tuned amplifiers. Tuned amplifiers are mostly used for amplification of high or radio frequencies. It is because radio frequencies are generally single and the tuned circuit permits their selection and efficient amplification. Tuned amplifiers are widely used in radio and television circuits where they are called upon to handle radio frequencies.

Procedure:

1. Open multisim software to design circuit.
2. Select on new editor window and place the required component on the circuit window.
3. Make the connections using wire and check the connections and oscillator.
4. Go for simulation and using Run key observe the output waveforms on CRO.
5. Indicate the node names and go for AC analysis with the output node.
6. Observe the AC analysis and draw the magnitude response curve.

Calculations:

Gain = 2603.54

Bandwidth = $f_H - f_L$

= 11K - 9K

= 2KHz

f_H = upper cut off frequency = 11KHz

f_L = lower cut off frequency = 9KHz

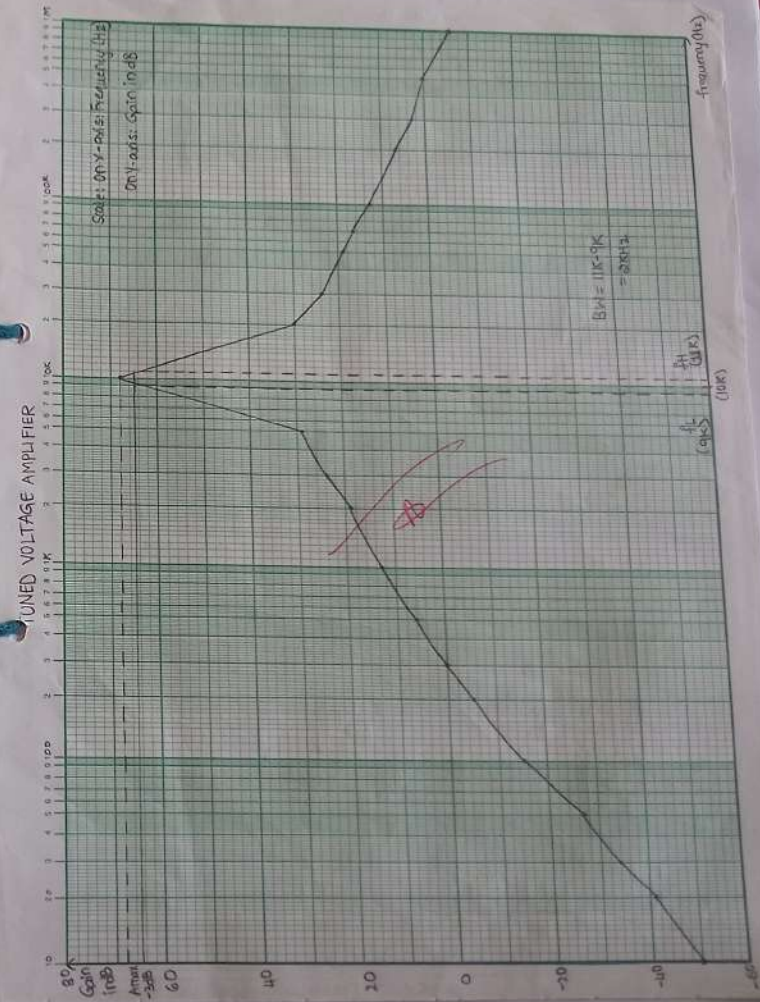

(c) (Experiment)

7. Calculate the bandwidth of the amplifier.

Result:

1. Frequency response of single tuned amplifier is setted.
2. Gain = 68.311 dB (maximum)
3. Bandwidth = (fH - fL) = 8K Hz.

Circuit diagram: Series FED Class A power amplifier

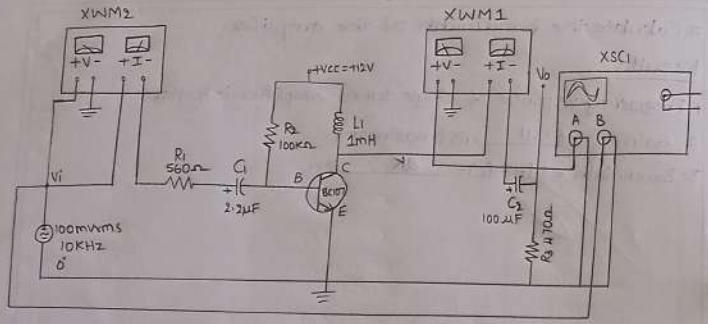

Observations & Graphs:

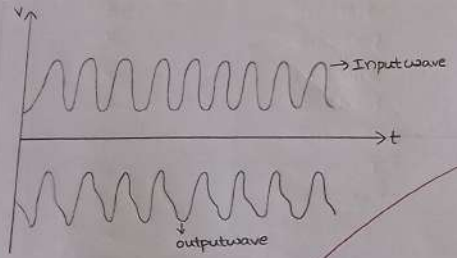

Result & Critical Analysis: Class A power amplifier - AC analysis

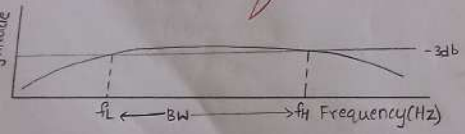

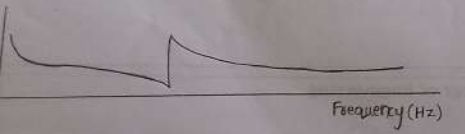

Series FED Class-A Power Amplifier (using simulation)	Exp. No: 6
	Date: 28/3/25

Aim: To observe input and output power of class A power amplifier and also calculate bandwidth.

Simulation Tool: Multisim 14.1

Apparatus:

S.No.	Name	Range	Quantity
1.	DC Regulated Power Supply	(0-30)V	1
2.	Resistors	100KΩ, 560Ω, 470Ω	1
3.	Capacitors	2.2μF, 100μF	1
4.	Inductor	1mH	1
5.	CRO	-	1
6.	Wattmeters	-	2

Theory:

The amplifier is said to be Class A power amplifier if the q point and the input signal are selected such that the output signal is obtained for a full input cycle. For this class the position of q point is approximately at the mid-point of the load line. For all the values of input signal the transistor remains in the active region and never enter into the cutoff or saturation region. The collector current flows for 360° (life cycle) of the input signal in other words the cycle of the collector current flow is 360°. The class A amplifiers are further classified as

Observations:

Input voltage Vin = 100mV

S. No.	Frequency (Hz)	Gain (AV) = Vout / Vin	Gain in dB = 20logAV
1.	10	0.002201	-53.14
2.	50	0.048917	-26.21
3.	100	0.140999	-17.01
4.	200	0.329695	-9.63
5.	500	0.875508	-1.15
6.	1K	1.761395	4.91
7.	2K	3.520737	10.93
8.	3K	7.019216	16.925
9.	5K	8.828107	18.91
10.	10K	17.47046	24.69
11.	20K	33.77059	30.57
12.	30K	50.47855	34.062
13.	50K	70.75607	36.995
14.	100K	97.5965	39.788
15.	200K	109.0883	40.755
16.	500K	100.5997	40.05
17.	1M	75.76489	37.589

BW = fH - fL

= 1MHz - 60KHz

BW = 940KHz

fH = upper cut off frequency

fL = lower cut off frequency

directly coupled and transformed coupled and transformer coupled amplifiers in directly coupled type. The load is directly connected in the collector circuit while in the transformer coupled type, the load is coupled to the collector using the transformer.

Advantages:

1. Distortion analysis is very important.
2. It amplifies audio frequency signals faithfully hence they are called as audio amplifiers.

Disadvantages:

1. H-parameter analysis is not applicable.
2. Due to large power handling the transistor is used power transistor which is large in size and having large power rating.

Procedure:

1. Enter into the Multisim 14.1v software.
2. Customise the screen and then draw the circuit on the screen with the help of mouse.
3. Connect the WATTMETERS on both input & output side.
4. The input terminal is connected to one terminal of CRO and output to other terminal.
5. Start the simulation and observe the input and output waveforms.
6. Note down the values of input and output powers from wattmeters.

Calculations:

Output power (XWM1) : 454.857mW

Input power (XWM2) : 1.80W

$\% \eta = P_{ac}/P_{dc} \times 100$

$= \frac{454.857 \times 10^{-3}}{1.80} \times 100$

$\eta = 25.21\%$

Bandwidth $= f_H - f_L$

$= 1MHz - 60KHz$

$= 940KHz$

$f_H = 1MHz$

$f_L = 60KHz$

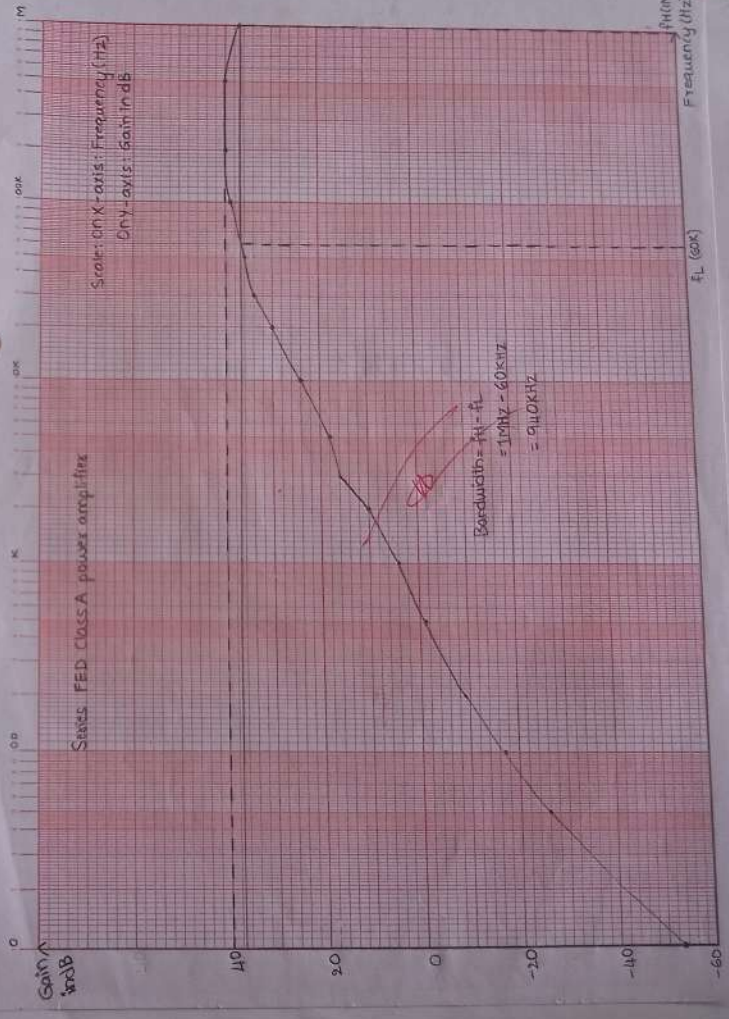

Page No.

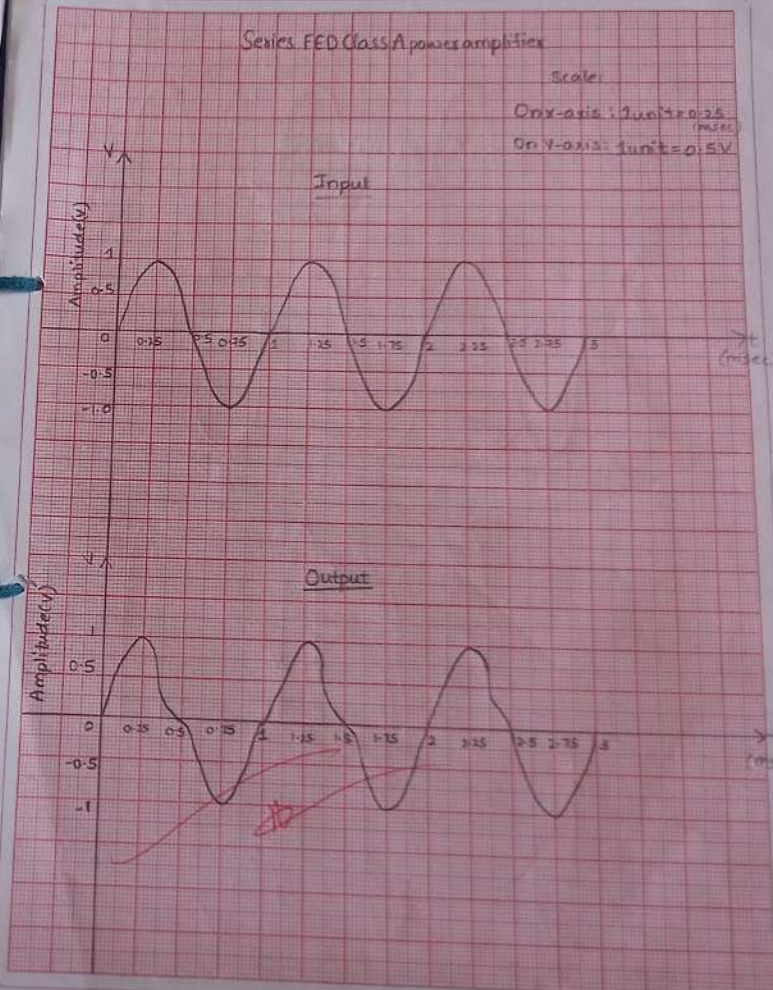
Series FED Class A power amplifier
Scale:
On x-axis: 1 unit = 0.25 (msec)
On Y-axis: 1 unit = 0.5 V
Input
Amplitude (V)
Output
Amplitude (V)
t (msec)
t (msec)

Calculations:

Efficiency $(P_{ac}/P_{DC}) =$

$P_{ac} = V_{cc} \cdot I_c$; $P_{DC} = \frac{V_m}{\pi R_L} = \frac{V^2_{PP}}{\pi R_L}$

$\% \eta = P_{ac}/P_{DC} \times 100$

efficiency = 25.21%

Result:

i) Gain = 109.08

ii) Lower Cut off frequency = 60KHz

iii) Upper cut off frequency = 1MHz

iv) Bandwidth = 940KHz

Circuit diagram:

Complementary Symmetry Class-B Power Amplifier

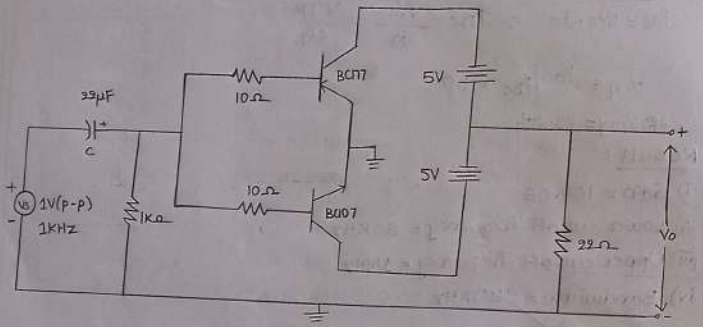

Output Waveform:

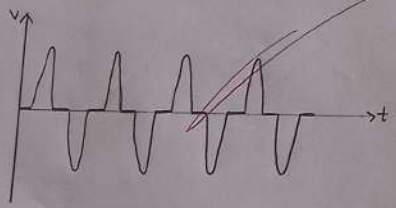

Complementary - Symmetry class - B power Amplifier (using simulation)	Exp. NO: 7
	Date: 22/3/25

Aim: To design a complementary symmetry class-B pushpull power amplifier in order to achieve maximum output AC power and efficiency by using simulation software.

Apparatus Required:

S.No.	Name	Range	Qty.
1.	Resistors	1KΩ, 10Ω, 22Ω	1,2,1
2.	Transistors	BC107, BC177	1,1
3.	Capacitor	22μF	1
4.	DC regulated power supply	(0-30)V	1

Theory:

Power amplifiers are designed using different circuit configurations with the sole purpose of delivering maximum undistorted output power to load. In complementary -symmetry class - B power amplifier two types of transistors, NPN and PNP are used. These transistors act as emitter follower with both emitters connected together. In class-B power amplifier, Q-point is located either in cut-off region or in saturation region. So that only 180° of input signal is flowing in the output. In complementary symmetry power amplifier, during the positive half cycle of input signal NPN transistor conducts and during negative half cycle PNP transistor conducts. Since the two transistors are complement of each other and they are connected symmetrically so

Observations: Input voltage = 1V (Vin)

S.No.	Frequency (Hz)	Gain (Av) = Vout/Vin	Gain in db
1	100	8.16E-05	
2	300	0.0002	-73.98
3	500	0.0004	-67.96
4	700	0.0005	-66.02
5	1K	0.0008	-61.93
6	3K	0.002	-53.98
7	7K	0.005	-46.02
8	10K	0.008	-41.94
9	30K	0.023	-32.77
10	70K	0.056	-25.03
11	100K	0.031	-30.17
12	300K	0.24	-12.39
13	700K	0.48	-6.37
14	1M	0.53	-5.51

Calculation:

$V_m = 1636 \times 10^{-6} V$

$\eta = \left[1 - \frac{1636 \times 10^{-6}}{5}\right] \times 78.5$

$\boxed{\eta = 78.47\%}$

Complementary - Symmetry Class B power amplifier

Page No.

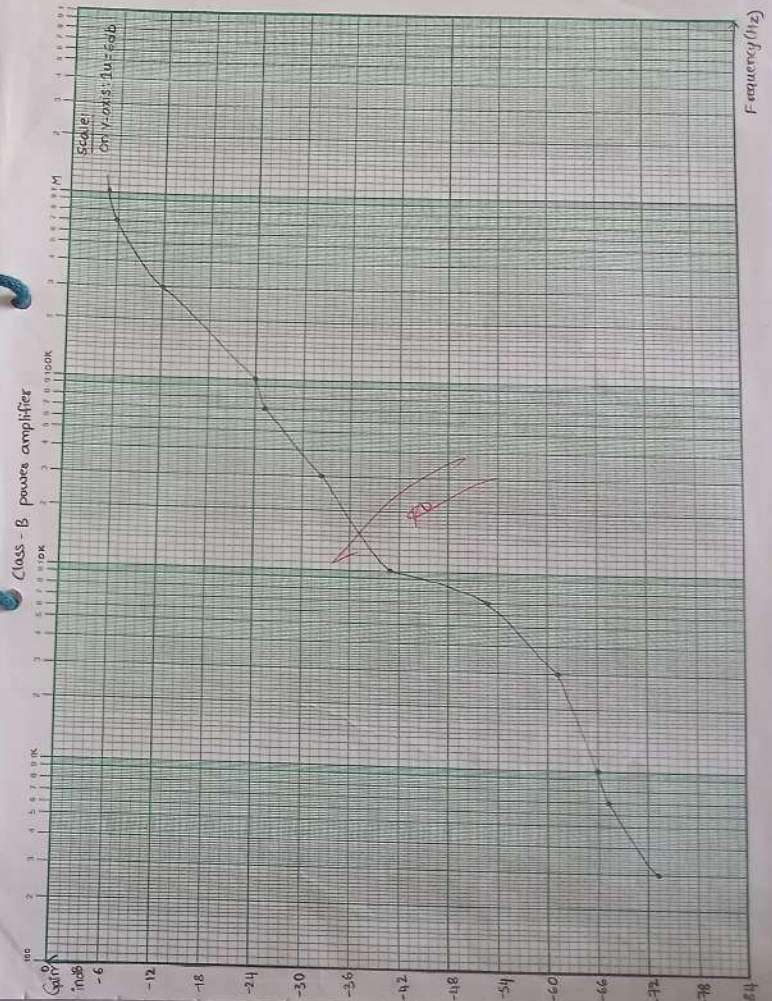

Complementary - Symmetry Class B power amplifier

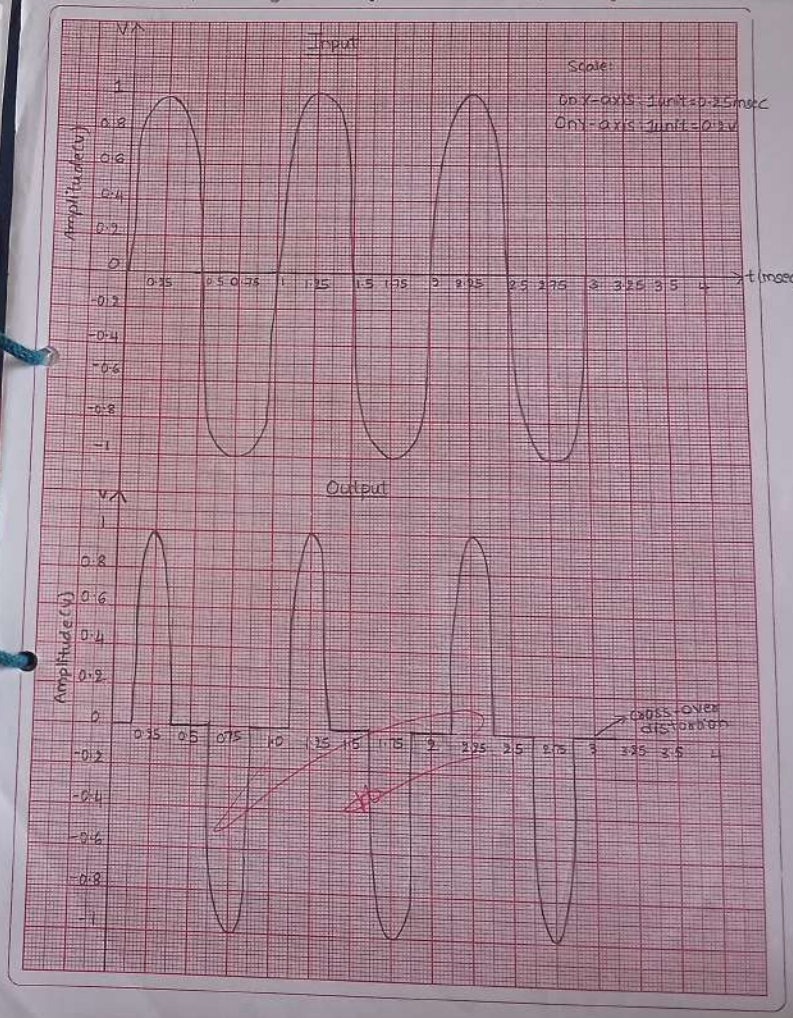

the name complementary symmetry has come. Theoretically efficiency of complementary symmetry power amplifier is 78.5%.

Procedure:

1. Connect the circuit as shown in circuit diagram.
2. Connect the signal generator output to input terminals of the circuit and Channel-1 of dual trace CRO.
3. Connect the output terminal of the circuit to Channel-2 of dual trace CRO.
4. Set the signal generator output at 1V sinewave at 1KHz constant and fed it to the circuit.
5. Simulate the circuit and observe the output waveform.

Observations:

Efficiency is defined as the ratio of AC output power to DC input power.

DC input power $= V_{CC} \times I_{CQ}$

AC output power $= V_{p-p}^2/8R_L$

Result & Critical Analysis:

Input DC power $= V_{CC} \times I_{CQ}$

Output AC power $= V_{rms} \times I_{rms} = V_{pp}^2/8R_L$

$$\eta = \frac{\text{output AC power}}{\text{input DC power}}$$

The maximum input signal amplitude which produces undistorted output signal is 0.7V.

The practical efficiency of circuit is 78.5%.